Tourmaline 1120

INSTALLATION INSTRUCTION

GBR-IRL

CONTENTS

1 INSTALLATION INSTRUCTIONS 3

2 PLACING THE APPLIANCE 3
- 2.1 Preparation and installation 3
- 2.2 Connection to the gas pipes 4
- 2.3 Removing the front glass panel 4
- 2.4 Removing the side glass panels 5
- 2.5 Fitting the front glass panel 6
- 2.6 Restrictor and baffle plate 7

3 INSTALLATION OF THE BURNER MESH AND DISPERSION MEDIUM 8

4 TECHNICAL DETAILS MAXITROL GV60 10

5 INSTRUCTIONS FOR MAXITROL GV60 11

6 GAS-TECHNICAL SPECIFICATIONS 12

7 CONCENTRIC PATHWAYS 14

8 CONCENTRIC FLUE SYSTEM 15
- 8.1 Components of the concentric flue system 15
- 8.2 Construction of concentric flue system 15
- 8.3 Installation instructions regarding existing flues 15
- 8.4 Parts 16
- 8.5 Installation 16

9 PASS-THROUGH POSITIONS AND FUNCTION CORRECTLY 17

10 CLEANING AND MAINTENANCE 18

11 FITTING THE LED GLOW BED MODULE 20
- 11.1 Installation instructions for the LED glow bed module 20
- 11.2 Fitting the glass plate 20
- 11.3 Fitting the LED unit 21

12 QUICK REFERENCE GUIDE FOR FAULTSSEARCH FOR ENCLOSED APPLIANCES USING MAXITROL GV60 GASCONTROL 23

Appendix 1 DIMENSIONAL DRAWINGS 25

Appendix 2 CONSTRUCTION DIAGRAM DOUBLE-WALL CONCENTRIC 26

thermoCet International B.V.
Laagerfseweg 27
3931 PC Woudenberg
The Netherlands
www.trimlinefires.com

Modifications and printerrors are reserved.

thermoCet International BV is not responsible for any (consequential) damage due to incorrect installation

V100621

1 INSTALLATION INSTRUCTIONS

NOTE

The installation may only be carried out by an authorised person.

- The appliance must be installed, connected, inspected and serviced as a closed appliance by a qualified fitter, according to local standards and regulations.
- The flue tube system and the outlets in the outer wall or roof face must also meet the requirements outlined in the applicable local standards and regulations.
- The temperature of the walls near the side and back of the appliance may not exceed the ambient temperature by 80 °C or more. For example, ambient temperature 20 °C, maximum increase of 80 K gives a maximum temperature of 100 °C
- The appliance has been approved in combination with the concentric flue system THC/Holetherm in accordance with European CE standards for gas appliances, and may therefore only be applied with this system.
- The appliance needs to be inspected by the fitter for local gas distribution (gas type and gas pressure) as indicated on the identification plate.
- The instructions are only applicable if the relevant country code is stated on the appliance.
- There will be air in the gas pipes when the appliance is first used. The gas supply pipes therefore need to be vented first.
- Ignite the appliance according to the user manual and check the flame is burning evenly. After the appliance has been used for the first time, any deposits resulting from curing must be removed from the glass panel using a glass cleaner made specifically for fireplaces.

Distance to flammable materials

Maintain the following minimum distances from combustible materials: front 1000mm, side 500mm, top 1200mm to curtains, fabrics and/or combustible material. Maintain a minimum distance of 100mm from the back wall.

Distance to non-flammable materials

The appliance needs to be placed a minimum distance of 25mm from the wall unless stated otherwise in these instructions.

⚠ WARNING

- Gas fires become hot when in use. After installation of the appliance, the glass panel surface is considered to be an active zone. The glass panel surface can become very hot.
- Therefore, you should take care by, for example, keeping children and those requiring help away from the immediate vicinity of burning fires. Gas fires must not be placed on or against flammable materials.

2 PLACING THE APPLIANCE

NOTE

Before putting the appliance in place, we recommend you first read Chapter *8 Concentric flue system*.

Option

If you want to install an LED glow bed module, first review Chapter *11 Installing the optional LED glow bed module*.

2.1 Preparation and installation

The appliance is delivered in a crate. Remove the packaging and check the appliance for possible damage.

NOTE

- Place the appliance on a stable surface.
- Do not place the appliance on its side.
- Put the appliance in its place of destination.

The packaging contains the following components:

- Appliance
- Remote control
- Ceramic wood set
- Bag of glow wool
- Dispersion medium (glass granules and coal embers)
- Restrictor
- 4 x AA battery
- 2 x AA battery
- Suction cup
- Installation instruction
- User Manual

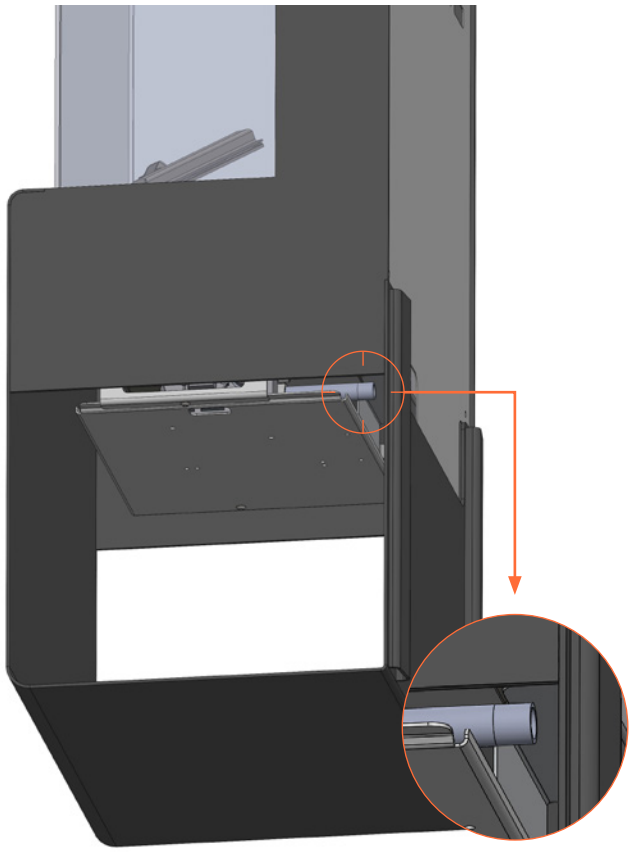

3/8" connection point

Before removing the appliance from the packaging, first check whether everything is whole and complete. If defects can be seen, report this to the supplier before fitting. You must then read and understand the installation instructions before starting the installation.

2.2 Connection to the gas pipes

You can determine where the gas pipes will be placed, dependent on the layout. Ensure control equipment is not twisted during installation and there is no excessive tension. Accessibility of various connection points in relation to components needs to be maintained. After installation, check the connection seals are gas-tight. Use a 3/8" gas tap with a connector. Ensure the gas pipes are free of dirt and soil or sand and that the gas and combustion controls in the various components and all appliance functions operate correctly. The gas supply should only be connected up when the electricity supply is disconnected. Failing to do so may cause damage to the gas control equipment.

2.3 Removing the front glass panel

The front glass panel is clamped at the bottom and top.

- Remove the strips next to the side glass panels 1. The strips are loose and can be lifted with a small screwdriver or a magnet ❶.
- After removing the strips, the two clamping screws ❷ are visible. Loosen these screws a few turns, do not remove the screws.
- Remove the clamping strip on the upper side of the front glass panel 2. The strip can be pressed downwards using a small screwdriver ❸.
- Place the suction cup approximately in the middle of the glass 3.
- Carefully lift the glass panel up to the stop ❹, the glass panel can be moved forward at the bottom ❺ and taken out diagonally downwards ❻.
- Place the glass panel in a safe place so that it does not fall and/or get damaged.

NOTE

If the dismantled glass panel is damaged (scratches and/or damaged edges) do not use the glass panel; notify the supplier.

1

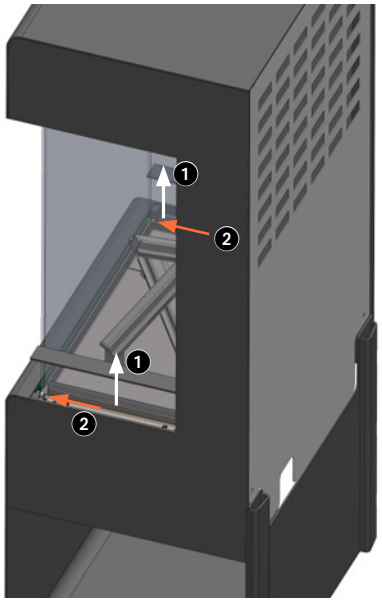

2

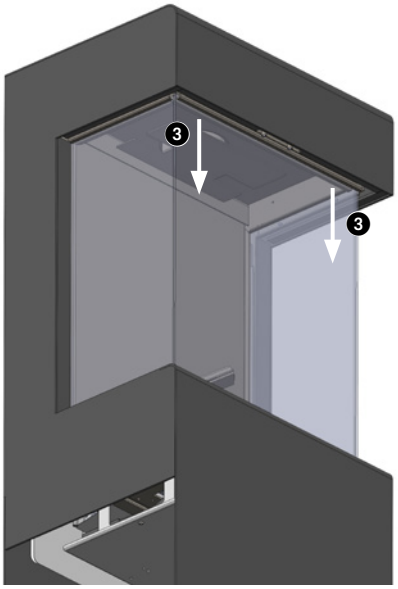

3

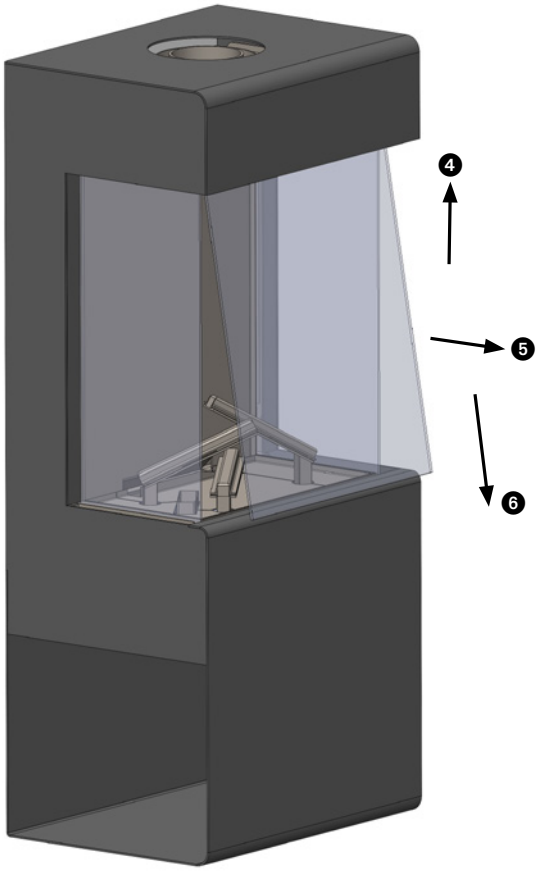

2.4 Removing the side glass panels

The side glass panels do not need to be removed when installing the appliance. For replacement or thorough cleaning, proceed as follows:

- First remove the front glass panel, see previous text.
- The side glass panels are clamped with four bolts and a clamping strip per panel 4.
- Take out the strips next to the back of the side glass panels 1. These strips are fixed with magnets and can be removed from the bottom to the front.
- Loosen the four bolts per glass panel, two under 2 and two behind 3, but do not remove them.
- Remove the clamping strip on the upper side of the side glass panel 5. The strip can be pressed downwards using a small screwdriver 4.
- Place the suction cup in the centre of the side glass panel 6
- The side glass panel can now be carefully pushed upwards to the stop 5.
- The side glass panel is then pushed forward 6, just enough to be able to pivot the glass panel out at the bottom 7.
- The side glass panel can now be removed diagonally downwards 8.

4

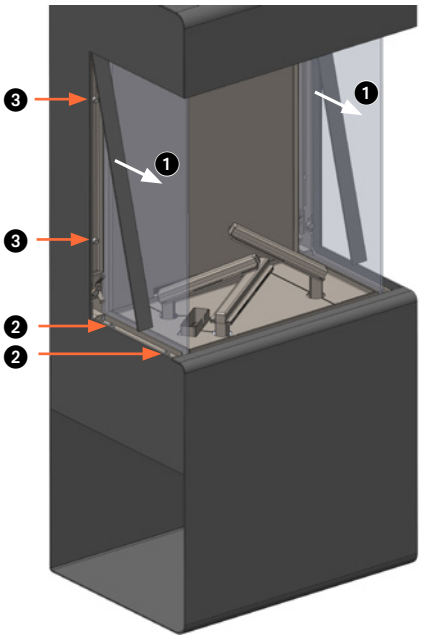

5

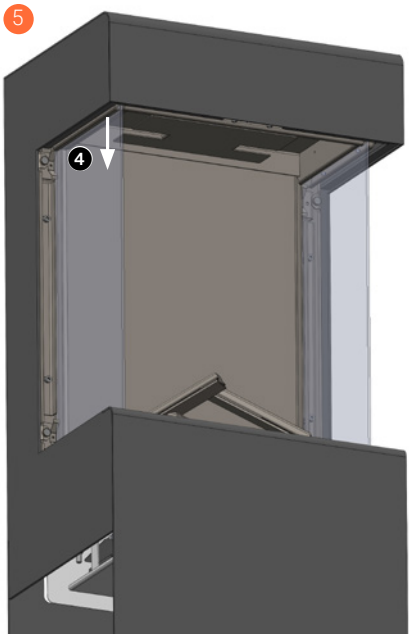

6

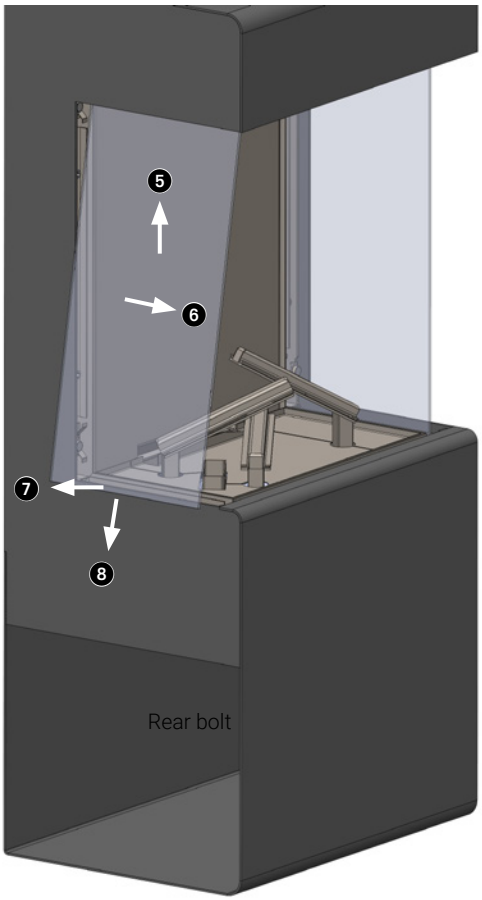

2.5 Fitting the front glass panel

NOTE

When fitting the front glass panel, there is a risk of the glass breaking. The side glass panel is pressed against the front glass panel by spring pressure. When removing the front glass panel, the side glass panel can creep forward due to the spring pressure.

Therefore, proceed as follows to refit the front glass panel:

- The side glass panel does not need to be removed, but it must be pushed back.
- Loosen the screws of the glass holders of the side glass panels ❶ (do not remove the glass holder) or remove the spring glass holder*.
- Place the suction cup on the side glass panel and slide it, against the spring pressure, to the rear ❷, past the contact surface of the front glass panel ❸.
- Clamp the side glass panel(s) by tightening the glass holder screws or fitting the spring glass holder*.
- Make sure the seals are complete, whole and clean.
- Fit the front glass panel and ensure it is aligned with the side glass panel(s) ❹.
- Clamp the front glass panel by tightening the glass holder screws ❺ or fitting the spring glass holder*.
- Loosen the side glass panel(s) by loosening the glass holder screws (do not remove the glass holder) or removing the spring glass holder ❶.
- Carefully slide the side glass panel(s) forward using the supplied suction cup ❻. Check the side glass panel fits neatly against the front glass panel.
- Keep the side glass panel pushed against the front glass panel and clamp the side glass panel firmly by tightening the glass holder screws or fitting the spring glass holder*.
- Refit the decorative strips.
- Check the appliance ignites properly again.

* Depending upon the model.

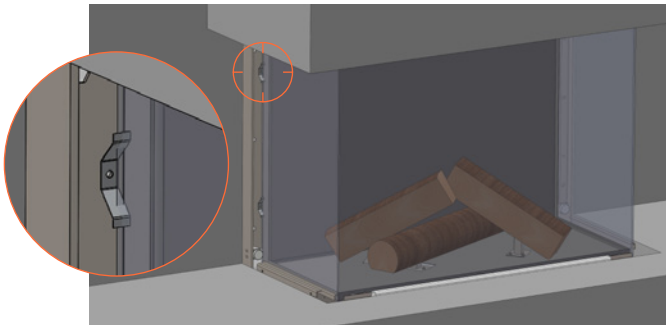

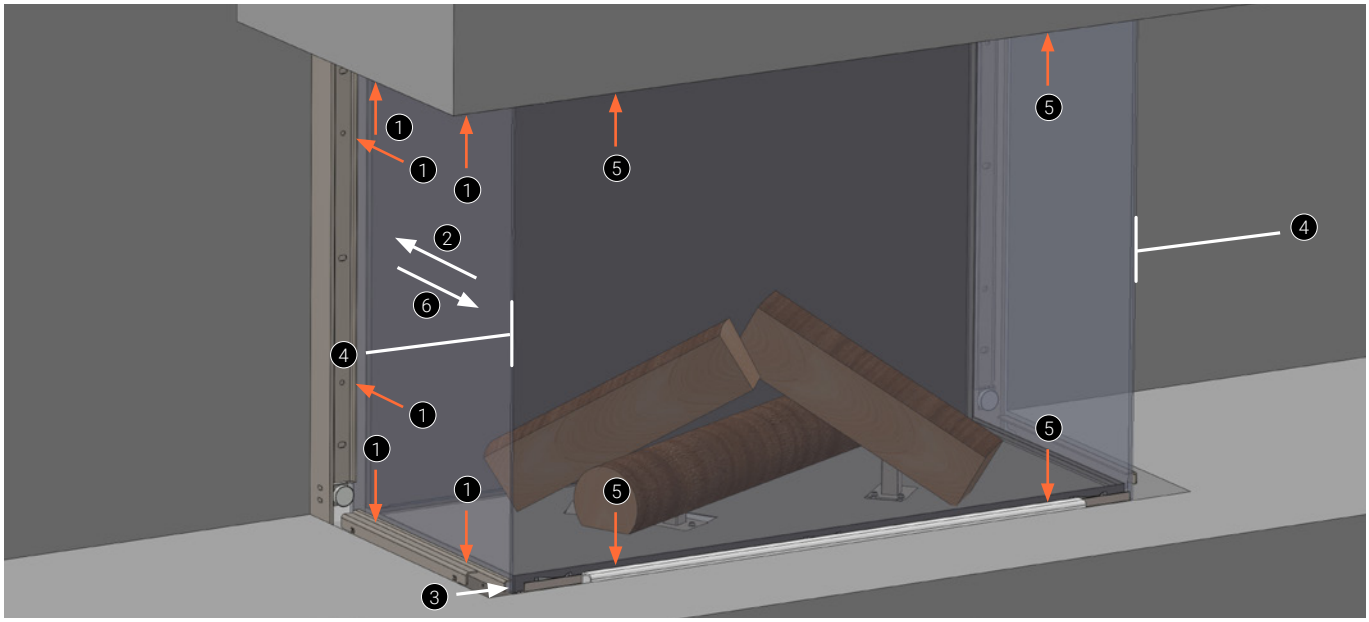

2.6 Restrictor and baffle plate

The restrictor 7 1 and/or baffle plate 2 can be mounted inside the appliance, at the location of the flue gas duct.

Chapter 7 *Concentric pathways* contains a table that describes when a baffle plate and/or a restrictor must be fitted. This is important to ensure the gas fire works correctly.

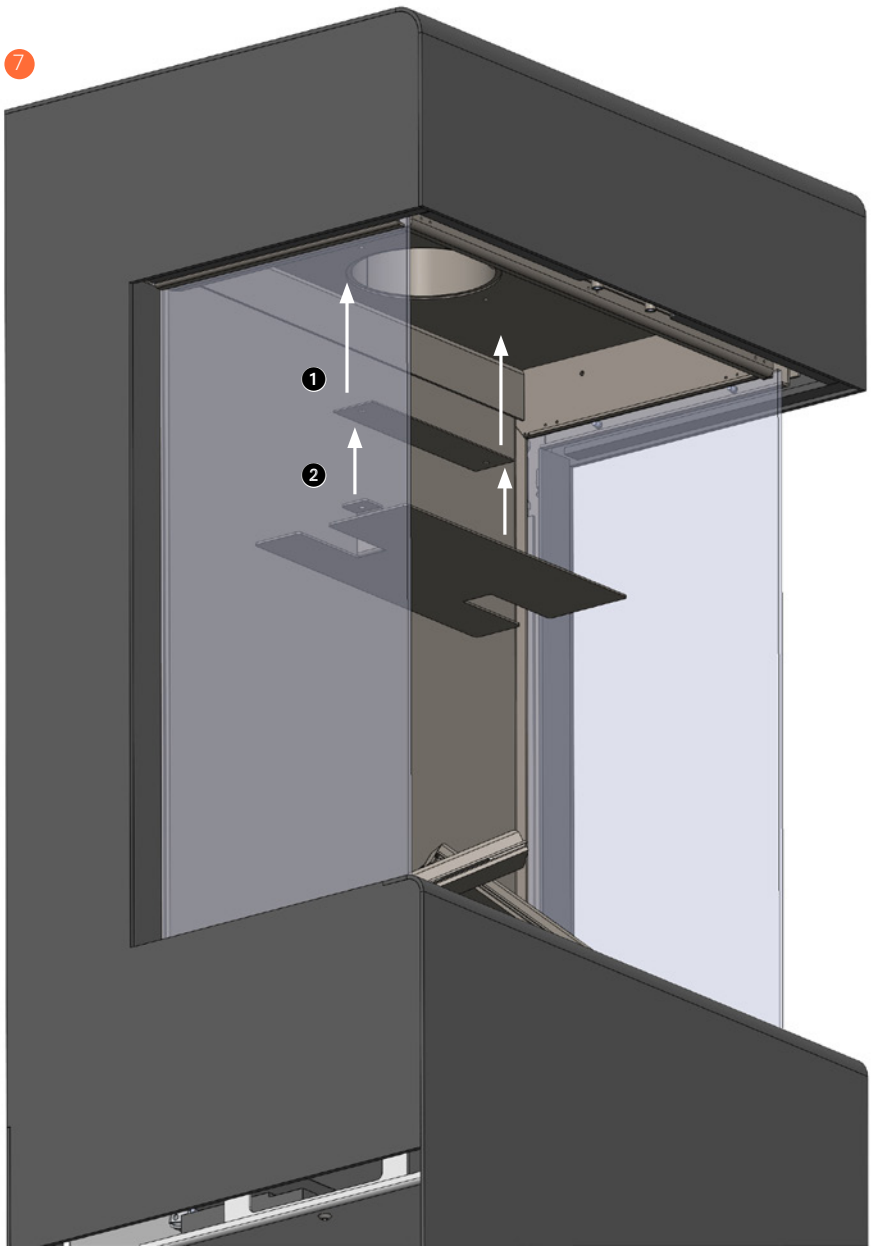

3 INSTALLATION OF THE BURNER MESH AND DISPERSION MEDIUM

Handle the logs carefully, the ceramic material is very fragile (for example, if dropped or bumped). Do this as accurately as possible; incorrect placement of the logs can negatively influence the flame and cause soot formation.

- Remove the front glass panel, see chapter 2.
- Remove the right-hand part of the grille.
- Remove the right burner 2.
- Distribute the glass granules evenly over the middle part of the grille.
- Place the middle log A on the horizontal burner 3.
- Fit the right part of the grille.
- Place the coal embers on the left and right part of the grille 4.
- Place log F on the right burner, with the bark facing to the right 5.
- Place log G on the left burner, with the bark facing to the left 5.
- Place the 3 small logs B in place 6.

NOTE

Two optional stools can be placed in the space under the appliance. This space should never be completely filled. Always keep at least 25 mm free at the top and at least 40 mm at the sides.

2

3
A

4
A

5
G
F

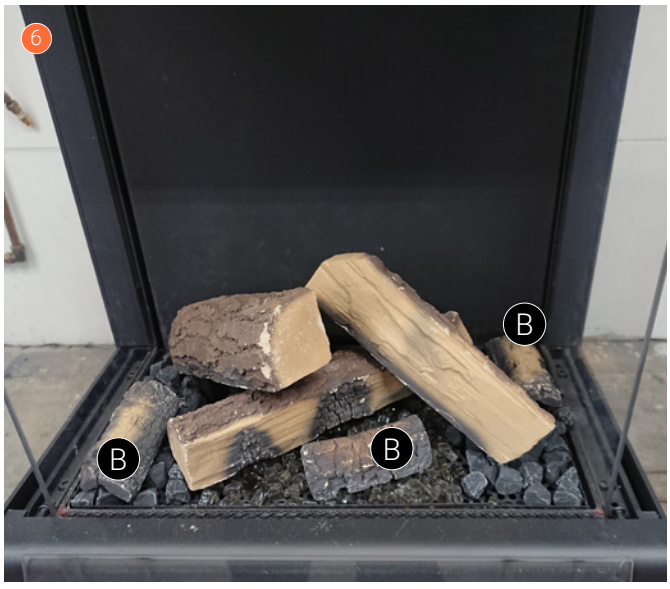
6
B
B
B

4 TECHNICAL DETAILS MAXITROL GV60

Gas valve type	Mertik GV60 M1
Automatic ignition control type	B6R-R8P (Wifi Ready)
Ignition	Remote control operation and piezo ignition
Gas connection	❶ Pilot flame connection ❷ Thermocouple connection ❸ Gas inlet 3/8" ❹ Gas outlet left and right burner ❺ Gas outlet front burner/middele burner ❻ Multi cable ❼ Piezo connection ❽ Connector double burner ❾ Receiver
Appliance category	C11-C31-C91
Pilot flame	SIT 3 flames
Security	Thermocouple principle

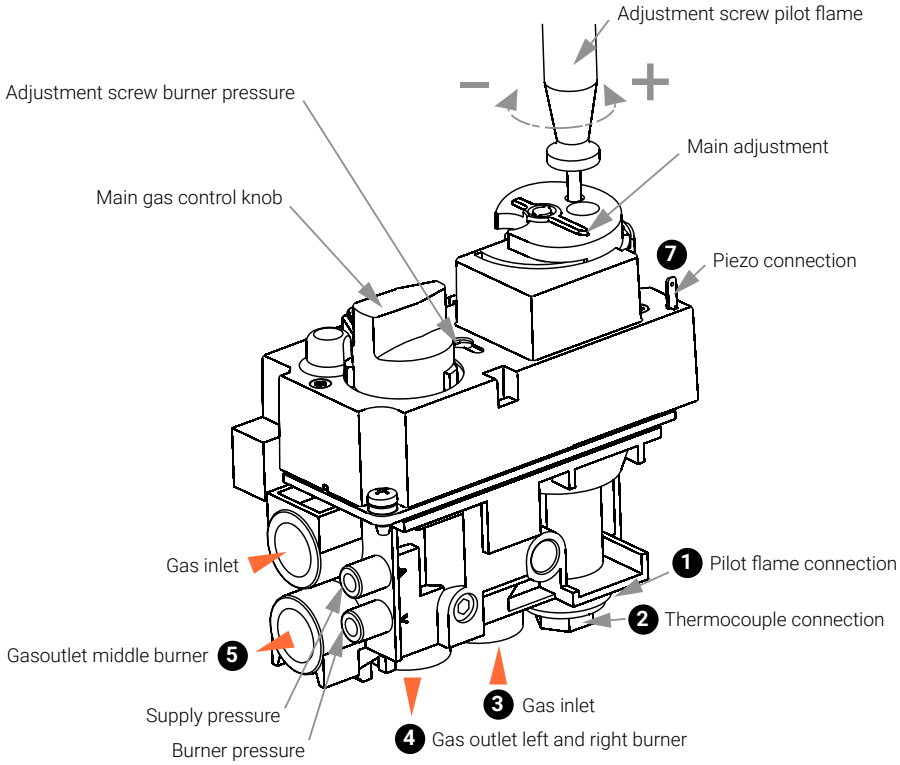

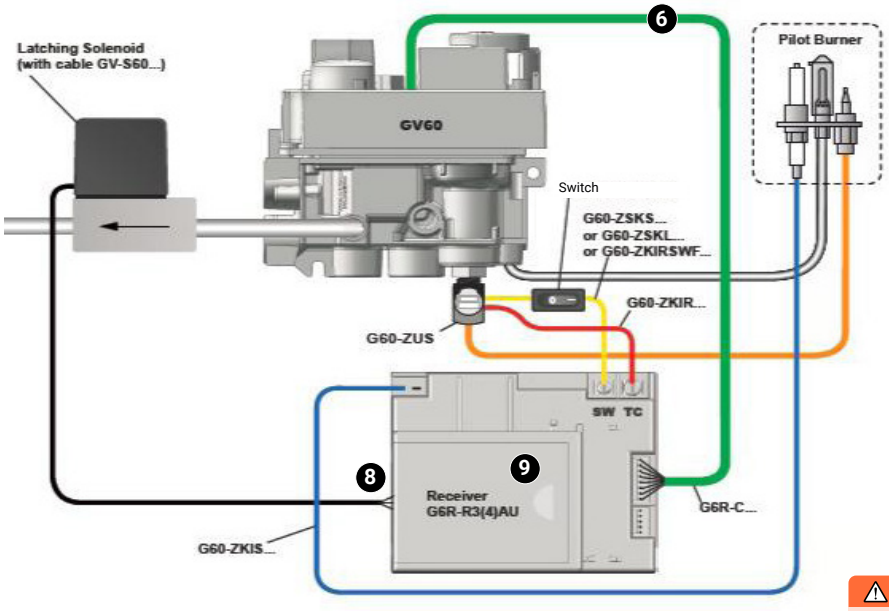

Schematic diagram.

⚠ WARNING

Sealed parts must not be adjusted.

5 INSTRUCTIONS FOR MAXITROL GV60

⚠ WARNING

- Ensure the fuel supplied to the appliance is clean and free from particles and moisture.
- The appliance must not be turned on if the glass pane(s) is not present and/or is broken.

Before a gas supply pipe (new or existing) is connected to the main gas pipe at the gas meter and to the gas valve of the appliance, clean and dry compressed air needs to have been blown through it. Copper and aluminium pilot flame pipes that have been cut must be deburred and blown clean before they are connected.

Heat, moisture and dust are a threat to all electronic components

Protect the electronic gas control until all construction, plastering and paintwork has been completed. If you cannot avoid this work, then protect the control against dirt and moisture penetration by covering it with plastic film for instance.

⚠ WARNING

- Electronic components become permanently faulty when they are exposed to temperatures higher than 60°C. Normal AA batteries will crack open at temperatures >54°C and the battery contents will damage the electronic switches below. Batteries have the longest life span at <25°C.
- Only install the gas valve and receiver as pre-installed at the factory.
- Remember that components may have to be replaced or that repairs may have to be performed at a later date. This may prove to be more difficult if the control is installed in a different way to how we have described in instructions.

Only insert the batteries after the receiver, gas valve and pilot flame have been wired.

Premature connection to the power source can damage the electronics. In the version with the LED module, inserting the batteries is not permitted. Use the mains adapter supplied with the LED module.

NOTE

Batteries should not be used in the receiver when using the LED module.

Ensure the ignition cable is not near the antenna wire and that they do not cross each other.

The high voltage released during ignition may damage the sensitive receiver circuit of the antenna. This could mean the appliance becomes less responsive or totally unresponsive to commands from the handset.

NOTE

- Do not tighten the contact breaker and the thermocouple connection too tightly on the gas valve.
- It is sufficient to tighten by hand and add a half a turn with an open-end spanner. Tightening too much will break the connection to the magnetic coil below and/or the insulation around the aluminium contact pin in the contact breaker. This may cause the magnetic coil to not open the gas supply to the pilot flame and prevent the appliance from functioning.

Only use the original extension set to extend the supplied thermocouple. (Available through your supplier. Not available with LED.) Extending the thermocouple beyond its limit will lead to a reduction in voltage. This may in turn prevent the activation of the magnetic coil.

Prevent leakage of ignition spark to parts of the installation other than the ignition rod on the pilot flame. Ensure the ignition cable is not in contact with the body or other metal parts.

The receiver and the control units on the gas valve should be switched on to ensure automatic start-up via the remote control. The oval disc on the gas valve should be turned to the **ON** position. The **I/0** switch should be set to **I**. The ignition cable should be connected to the **SPARK** connection point on the receiver.

The system's thermostat sensor is located inside the remote control. The remote control operates best at a distance of 2 or 3 metres away from the appliance. Although communication occurs via shortwave radio signals, it is recommended that you place the remote control in the line of sight of the gas appliance, in a place where the user wishes to experience a pleasant temperature. Do not place the manual transmitter in direct sunlight or other warm locations. The thermostat measures the temperature and, accordingly, regulates the flame size of the gas appliance.

NOTE

- Sealed parts must not be adjusted, to do so would void the warranty.
- A waiting time of 5 minutes between each start attempt must be observed.
- Remove batteries not with a metal tool. Removing batteries with a metal object can permanently damage the electronic control.

NOTE

In the event of an emergency, the **I/0** switch can be used to switch off the appliance. The **I/0** switch is located behind the opening on the left side of the mounting plate.

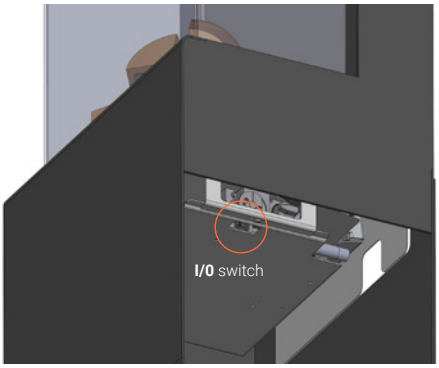

6 GAS-TECHNICAL SPECIFICATIONS

Type of indication(s)		1120 - Free Standing			
Appliance type		C11, C31, C91			
Concentric extraction system		Holetherm CC 100-150			
Gas type		G25,3	G20/G25	G20	G 20⇆G 25
Supply pressure in mbar		25	20	20	20/25
Country		NL	DE	AT/CH/CZ/DE/DK/ EE/ES/FI/GB/GR/ HR/IE/IT/LT/LU/ LV/ NO/PL/PT/RO/SE/ SI/SK/TR	BE/FR
Category		I_2EK I_2(43,46-45,3 MJ/m^3)	I_2ELL	I_2H/I_2E	I_2E^+
Primary air per burner	mm	L=3x Ø4,5 M=3x Ø3,5 R=3x Ø5,5"	L=3x Ø4,5 M=3x Ø3,5 R=3x Ø5,5"	L=4x Ø4,5 M=4x Ø3,5 R=4x Ø5,5	L=4x Ø4,5 M=4x Ø3,5 R=4x Ø5,5
Supply pressure	mbar	25	20	20	20⇆25
Burner pressure - high position	mbar	20,2	16,1	16,1	16,1 / 20,2
Burner pressure - low position	mbar	11,5	8,9	8,9	8,9 / 11,5
Injector orifice	Ømm	L Ø1,3 M= Ø1,2 R= Ø1,3	L= Ø1,3 Mid= Ø1,2 R= Ø1,3	L= Ø1,3 M= Ø1,2 R= Ø1,3	L= Ø1,3 M= Ø1,2 R= Ø1,3
Pilot flame injector	CODE	51	51	51	51
Low position orifice	mm	Adjustable	Adjustable	Adjustable	Adjustable
Load Hs	kW	6,7	6,2	7,6	7,6
Load Hi	kW	6,1	5,6	6,8	6,8
Gas consumption	m³/h	0,738	0,688	0,724	0,724
Nominal power - high position	kW	4,8	4,3	5,3	5,3
Nominal power - low position	kW	3,4	3,1	3,7	3,7
NOx Hi EN613	classe	4	4	4	4
Efficiency Class EN613		2	2	2	2
Useful return (NCV) system**					
For nominal heat output	%	78,0	77,3	78,8	78,8
For minimal heat output	%	73,8	74,0	74,7	74,7
Supplementary electricity consumption					
Nominal	kWh	0	0	0	0
Stand-by	kWh	0	0	0	0
Energy efficiency***					
Energy efficiency index (EEI)	%	78	78	79	79
Energy label		C	C	C	C
NOx Hs	mg/kWh	120	126	126	126

Heat output type/room temperature control	
Indirect heat functionality	No
Single stage heat output, no room temperature control	No
2 or more manually-adjustable stages, no control of the room temperature	No
With mechanical control of room temperature by thermostat	No
With electronic control of room temperature	Yes
With electronic control of room temperature plus day-time switch	Yes
With electronic control of room temperature plus week-time switch	Yes
Other control options	
Control of room temperature with presence detection*	Yes
Control of room temperature with open window detection*	Yes
With remote control option	Yes

* In combination with home automation

** Shortest system path

*** EU directive 2015-1186/1188

Type of indication(s)		1120 - Free Standing	
Appliance type		C11, C31, C91	
Concentric extraction system		Holetherm CC 100-150	
Gas type		G30/G31	G30
Supply pressure in mbar		(28-30)-37	30/50
Country		BE/CH/CY/CZ/ES/FR/GB/GR/IE/IT/LT/PT/ SI/SK	NL/BE/CH/CY/FR/GB/IT/LT/ SI/SK/AT/CH/ DE/ FR/SK/PL
Category		I_3+	I_3B/P
Primary air per burner	mm	L=4xØ6 Mid=4xØ15 R=4xØ7	L=4xØ6 Mid=4xØ15 R=4xØ7
Supply pressure	mbar	(28-30)-37	30/50
			Set burner pressure to 50 mbar
Burner pressure - high position	mbar	27,9	27,9
Burner pressure - low position	mbar	16,5	16,5
Injector orifice	Ømm	L=Ø0,75 M=Ø0,9 R=Ø0,75	L=Ø0,75 M=Ø0,9 R=Ø0,75
Pilot lame injector	CODE	30	30
Low position orifice	mm	Adjustable	Adjustable
Load Hs	kW	7,0	7,0
Load Hi	kW	6,5	6,5
Gas consumption	m³/h	0,202	0,202
Nominal power - high position	kW	5,2	5,2
Nominal power - low position	kW	3,8	3,8
NOx Hi	classe	4	4
Efficiency Class EN613		2	2
Useful return (NCV) system**			
For nominal heat output	%	79,4	79,4
For minimal heat output	%	75,2	75,2
Supplementary electricity consumption			
Nominal	kWh	0	0
Stand-by	kWh	0	0
Energy efficiency***			
Energy efficiency index (EEI)	%	80	80
Energy label		C	C
NOx Hs	mg/kWh	95,6	95,6

Heat output type/room temperature control	
Indirect heat functionality	No
Single stage heat output, no room temperature control	No
2 or more manually-adjustable stages, no control of the room temperature	No
With mechanical control of room temperature by thermostat	No
With electronic control of room temperature	Yes
With electronic control of room temperature plus day-time switch	Yes
With electronic control of room temperature plus week-time switch	Yes
Other control options	
Control of room temperature with presence detection*	Yes
Control of room temperature with open window detection*	Yes
With remote control option	Yes

* In combination with home automation

** Shortest system path

*** EU directive 2015-1186/1188

7 CONCENTRIC PATHWAYS

Table of concentric pathways						
Pathway	Illustration	X total in metres		Y total in metres		Restriction
x = vertical and y = horizontal		Min*	Max*	Min*	Max*	1120
Indirect façade outlet G20/25	A-B	1	3	0	4,5	See restriction conditions
Indirect façade outlet G30/G31	A-B	1	3	0	4,5	See restriction conditions
Roof pass-through without slope	C	2	12	-	-	See restriction conditions
Roof pass-through with 45º slope**	D	3	12	0	4	From X total - Y > 6 meter: 55mm
Roof pass-through with 90º slope***	E	3	12	0	2	From X + X1- Y > 6 meter: 55mm

45º Bend: calculation length 1 metres, 90º Bend: calculation length 2 metres
* Length including roof or exterior wall outlets. Always adhere to a starting length of 1 metre
** Ratio vertical : horizontal X + X1 + X2: Y ≥ 2: 1
*** Ratio vertical : horizontal X + X1: Y ≥ 2: 1

Restriction conditions all gas types		
Distance	Baffle plate	Restriction
G20 and G20/25 Vertical lay out		
1-6m	Yes	45mm
6-12m	Yes	55mm
G25/25,3 Vertical lay out		
1-6m	Yes	50mm
6-12m	Yes	55mm
G30/31 Verticale trajecten		
1-6m	Yes	45mm
6-12m	Yes	55mm
G20 and G20/25 horizontal sections up to 4,5 meter including wall ducts		
1m 90° en 0.5m	Yes	45mm
1m 90° en 4.5m	No	No
G25/25,3 horizontal sections up to 4,5 meter including wall ducts		
1m 90° en 0.5m	Yes	50mm
1m 90° en 4.5m	No	No
G30/31 horizontal sections up to 4,5 meter including wall ducts		
1m 90° en 0.5m	Yes	45mm
1m 90° en 4.5 m	Yes	No

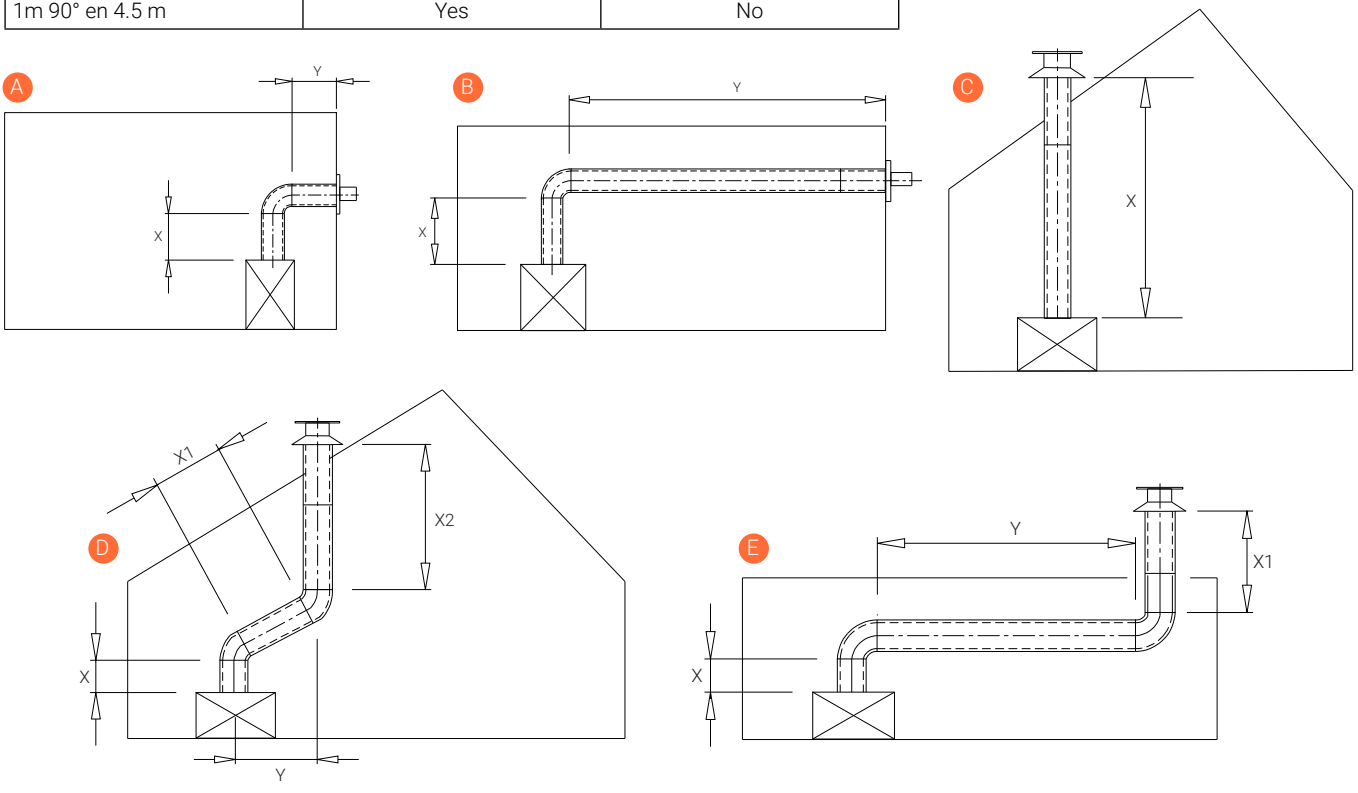

8 CONCENTRIC FLUE SYSTEM

The concentric flue system is composed of an inner flue and an outer flue. These flues have been set up concentrically so the combustion gases will be discharged via the internal flue while the fresh combustion air is supplied via the gap between the inner and outer flues.

8.1 Components of the concentric flue system

Different connections are possible using the concentric flue system. These are:

Through the roof face and through the exterior wall

The pathway used for this system can be laid in different ways, but there are a few important conditions:

- The total allowed vertical flue length must not exceed 12 metres (the sum of the flue length and calculation lengths for the bends).
- 90° bends have a 2-metre horizontal calculation length.
- 45° bends have a 1-metre horizontal calculation length.
- The outlet can be installed at any point on the roof face or exterior wall (supply and discharge in an identical pressure area), but must meet applicable regulations.
- Flue pathways must not be insulated.

NOTE

- Ensure the restrictor is mounted in the correct manner, as indicated in these instructions.
- The correct restrictor will provide the appliance with the most optimal efficiency, flame image and combustion.
- Mounting an incorrectly placed restrictor may cause malfunction of the appliance.

8.2 Construction of concentric flue system

Indirect wall connection

- The outlet may also be installed in an upwards exhaust in the wall, taking any hindrance to the surrounding area into consideration, in accordance with local standards and regulations.

NOTE

Ensure wind pressure on the outlet is not excessive, such as in locations with a balcony, flat roof, corners and very narrow alleys, etc., as this can negatively affect the performance of the appliance.

- Make a recess in the façade of around 155mm or 205mm when using respectively Ø100-150 and Ø130-200 flues (keep an extra space of 50mm in a refractory façade around the outer tube) and fit the façade pass-through with the wall plate on the inside of the wall. The wall plate of the exterior façade pass-through must be sealed sufficiently against the wall on the outside to avoid moisture and/or flue gas leaks leaking into the living space. We recommend our clearance box use as a direct façade pass-through through a refractory façade.
- The flue should be encased if necessary. Even if the flue is to be installed along non-refractory materials, sufficient fire-resistant measures must be taken.
- Determine the position of the appliance and outlet and begin construction of the flue with the connection on the appliance, paying attention to the direction of installation and connecting the elements by means of clamp strips.
- An adjustable pipe can be used between the bends or when connecting to the appliance. If necessary, use wall brackets to support the flue.

Mounting using the roof pass-through option

- The flue outlet can be located at any random place on the roof face (supply and exhaust in identical pressure areas) and must meet the applicable rules and regulations.
- A roofing sheet for a flat roof or a roofing sheet lead for sloping tiled roofs can be used for a watertight duct. Use various bends for the slope, if required. The recess in the roof decking should be 50mm larger all around to ensure sufficient fire resistance.
- One needs to take into account the regulation regarding fire resistance between rooms. (For this, see the applicable local standards and regulations.) A casing of fireproof material (for example, 12mm Promatect fire-resistant plate) should be applied up to 25mm from the outer flue.
- Determine the position of the appliance and the outlet and begin the construction of the flue with the connection on the appliance (always 1 metre vertical first) pay attention to the direction of installation. The inner flue must be installed for draining purposes. Connect the elements using the clamping straps. Ensure all connections are gastight.
- An adjustable pipe can be used between the bends or when making the connection to the appliance and/or the roof pass-through. Use 2 wall brackets to support the flue on each floor.

8.3 Installation instructions regarding existing flues

APPENDIX 2

Instructions

The flue gas exhaust system falls within category: C91 and must be built in accordance with national rules and regulations and the instructions of the manufacturer, as specified in the documentation and installation instructions.This means, among other things, that the chimney pass-through must not be smaller than 150mm round/square, but no larger than 200mm, and not ventilated by grilles, etc. In the case of larger chimney pass-throughs, a flexible hose of around 150 mm may possibly be used in combination with a flexible hose of around 100mm, as described below. For other situations, consult your supplier.

8.4 Parts

Check all parts for damage before commencing the installation. For the conversion of a brick flue to concentric flue, connected to CC flue system, you need the components described in APPENDIX 2.

NOTE

The renovation/sanitation set consists of parts:
- ❸ Interior mounting plate
- ❹ Sliding element
- ❼ Chimney mounting plate

8.5 Installation

- Guide the flexible hose ❺ through the existing flue ❻.
- Attach the slider ❹ to the bottom of the flexible hose and secure this in place using two Parker screws.
- Keep the bottom of the slider at the same height as the bottom of the flue or ceiling.
- Shorten the flexible hose to approximately 100mm above the chimney coping.
- Attach the mounting plate to the flexible hose on the roof ❼, clamp it with a hose bracket. Stainless steel Ø90 to 165, secure the whole with Parker screws.
- Attach the mounting plate to the chimney coping watertight on the roof ❼ using silicone sealant and stainless steel screws.
- Install the roof pass-through ❾ and secure it in place using the supplied clamping strip ❽.
- The slider ❹ will protrude approximately 100mm underneath the flue or ceiling after installation.
- Attach the inner mounting plate ❸ gastight against the bottom of the structural flue or against the bottom of the concrete floor using silicone sealant and screws.
- Position the appliance in accordance with the instructions of the appliance manufacturer
- Install a minimum of 1 metre of concentric flue type THC CC ❶.
- Extend the concentric flue using sections up to a minimum of 100mm in the structural duct. Finally, turn the clamping strip by hand in the mounting plate inside ❸.

9 PASS-THROUGH POSITIONS AND FUNCTION CORRECTLY

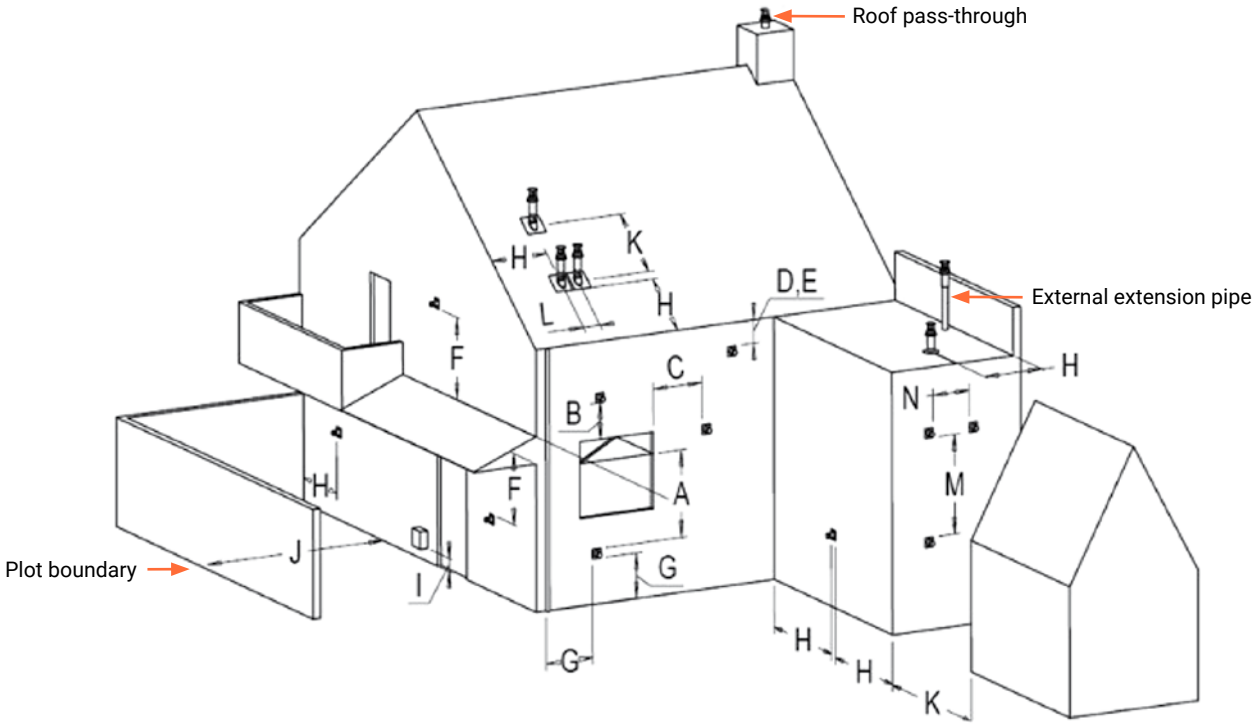

Dimensions	Outlet positions	Distance mm
A	Distance to ventilation openings	Room*
B	Distance to ventilation openings	Room*
C	Distance to ventilation openings	Room*
D	Lower gutter bottom pipes or exhaust lines	500
E	Under the eaves	500
F	Under a carport, roof or balcony, inside and outside corners	500
G	From ground level and rainwater drainage pipes	300
H	Inside and outside a corner	500
I	Above an external gas pressure regulator	1000
	Side of a gas pressure regulator	500
J	Conflict distance façade outlet	Room*
K	Roof drain centre to centre	1000
L	From the centre of both roof drains	450
M	Two wall drains above each other	1000
N	Two wall drains next to each other	1000

* In accordance with local building codes

10 CLEANING AND MAINTENANCE

- The appliance must be checked and serviced by a recognised installer at least once a year. The glass is also cleaned during this process
- It is advisable to regularly clean the outside of the appliance, both during and outside the heating season.
- Do not use aggressive or corrosive cleaning agents or sharp objects.
- The concentric flue system must be cleaned every 2 years. A check must be carried out on:
  1 Seal of the exhaust and supply circuit.
  2 Seal of the upper and lower pressure release hatches of the appliance; check the gasket.
  3 The operation of the pressure release hatches; that they can open and close freely.
  4 Correct operation of the gas valve and ignition of the burner.

Measuring points

The appliance has 4 measuring points: 2 on the gas control block, and 2 at the top of the appliance under the upper cover for the flue gas and the supply air.

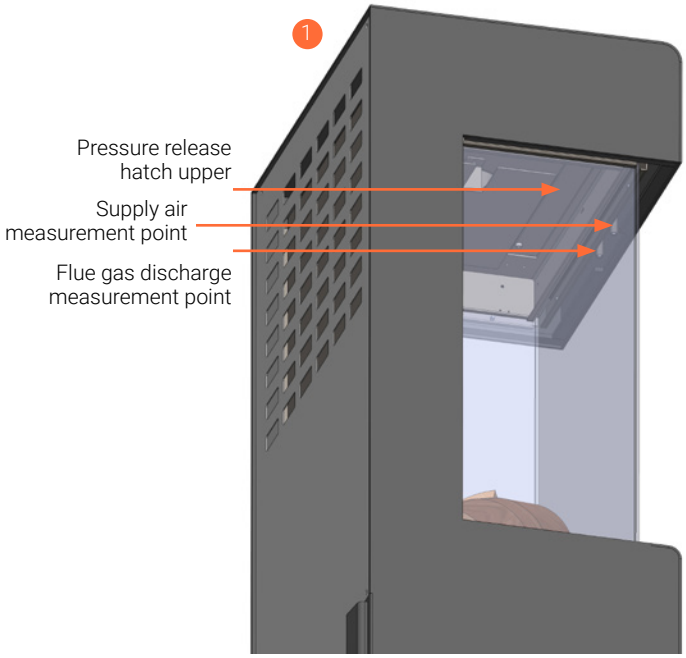

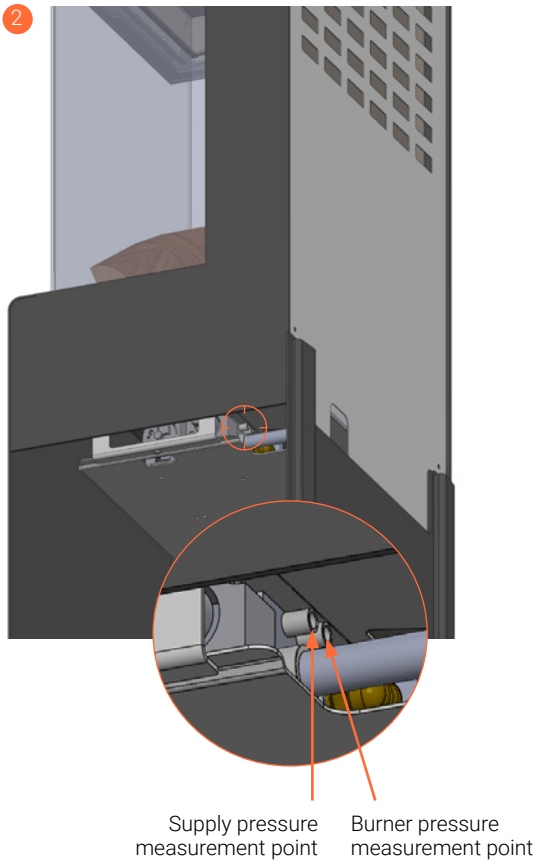

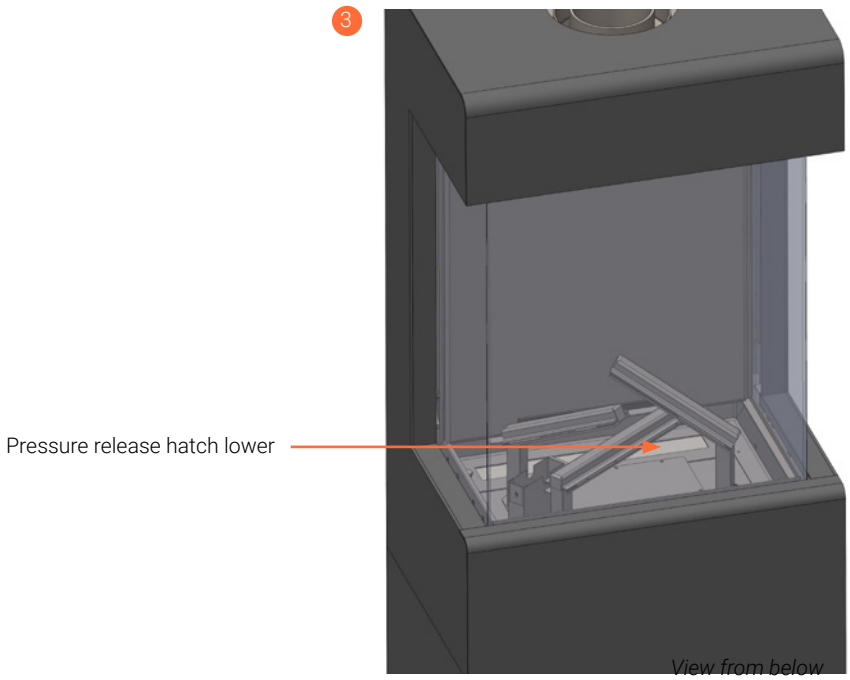

AR glass (Anti-Reflective glass) cleaning instructions

General

AR glass is a non-reflecting ceramic glass. This glass has an AR coating on both sides of the glass. The anti-reflection layer reduces the reflection to a minimal gloss. It is a known fact that the coating layers are more sensitive than the ceramic, therefore it is necessary to follow special cleaning procedures.

NOTE

Wear soft cotton gloves at all times.

Important

Do not use any of the following cleaning agents:

- Hard or abrasive sponges, steel wool, abrasives
- Cleaning agents with ammonia or acid (even citric acid)
- Paper towels, ceramic hob cleaner.

Only use

Water or a suitable detergent surfactant.
We recommend our thermCet Cleaner set.

Important

After the first use, there will be a white haze on the inside of the glass pane; this white haze must be removed immediately after the first use when the appliance has cooled down.
The higher the frequency of use, the more often cleaning is required. After more frequent use, more frequent cleaning of the glass panel will be necessary. By not cleaning the glass panel in time, it will become dull and increasingly difficult to clean.

Information

If a unit with AR glass is placed near windows, or if there is a lot of light on the glass, it is possible the reflection of bright colours will be seen. For example, the AR glass may reflect the colours from a red sofa, white table or a floor.
If the AR glass is cleaned regularly, or by frequently using products that are not recommended, the AR effect will fade over time.

11 FITTING THE LED GLOW BED MODULE

11.1 Installation instructions for the LED glow bed module

The LED glow bed module consists of:

- LED unit
- Mains adapter
- Sealing set
- Glass panel
- Glazing bars

Fitting the glow bed module consists of two parts:

1 Fit the glass plate in the combustion chamber
2 Fit the LED module to the mounting plate under the combustion chamber

There must be a 230 VAC wall socket for the LED module power supply in the vicinity of the appliance.

11.2 Fitting the glass plate

- Remove the front glass panel, Paragraph *2.3 Removing the front glass panel.*
- Remove the right-hand part of the grille 1 1.
- Remove the right burner 2 by loosening the 2 bolts.
- Slide the middle part of the grille 3 to the right and then remove the middle burner 4.
- Remove the middle grille 3 from the appliance.
- Remove the left grille 5 and, if necessary, the left burner 6.
- Remove the air guide 2 7 and central sealing plate 8, this will create a recess in the bottom of the appliance.
- Be careful to ensure the seal does not get damaged.
- Place glass plate 4 9 on top of the seal, glossy side up and matte side down.

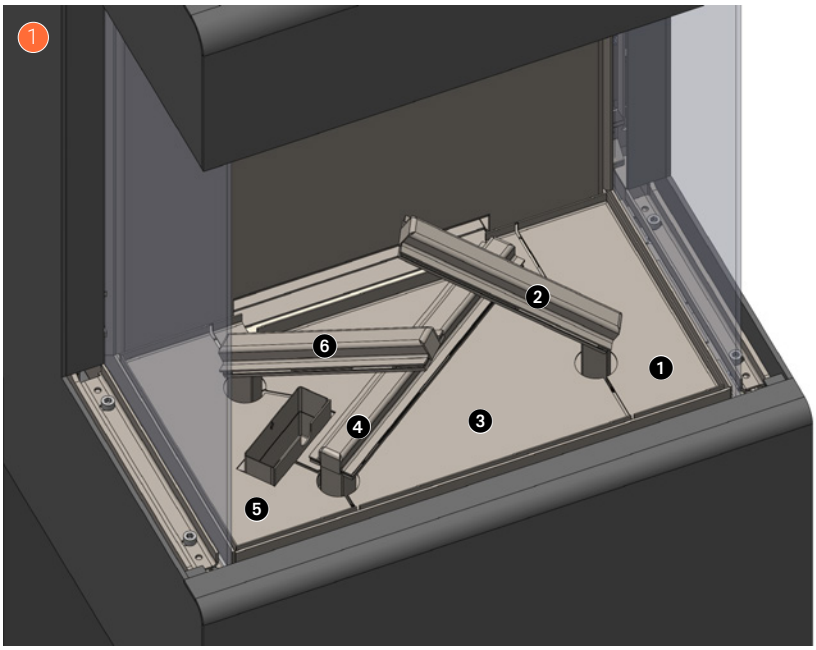

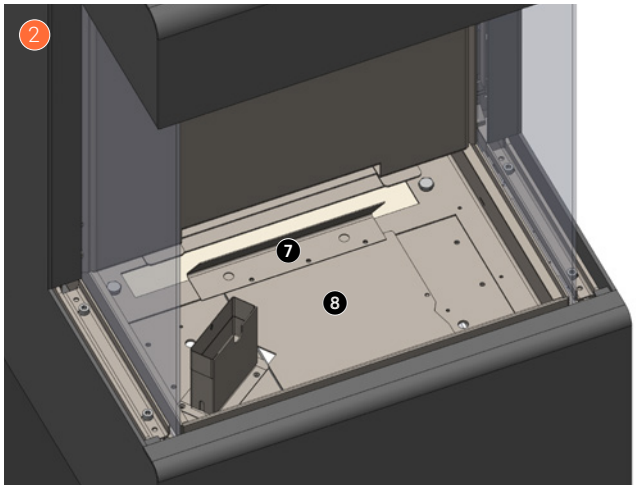

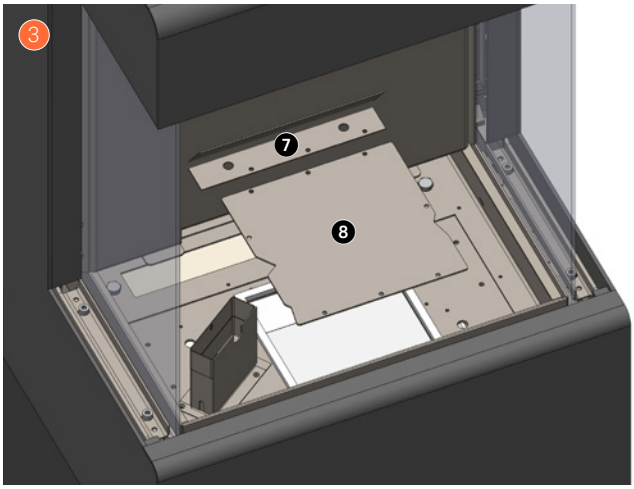

- Clamp the glass plate in place using the glazing bars ⑩ ⑪, the short glazing bars ⑩ are fitted on the left and right side, the long glazing bars ⑪ are fitting at the front and back, do not forget to refit the air guide ⑦.
- Do not overtighten the screws, this could risk glass breakage.
- Refit the burners and grilles in the reverse order.
- Refit the supplied wood set and dispersion medium, see Chapter *3 Installation of the burner mesh and dispersion medium.*
- Fit the front glass panel, See Paragraph *2.5 Fitting the front glass panel.*

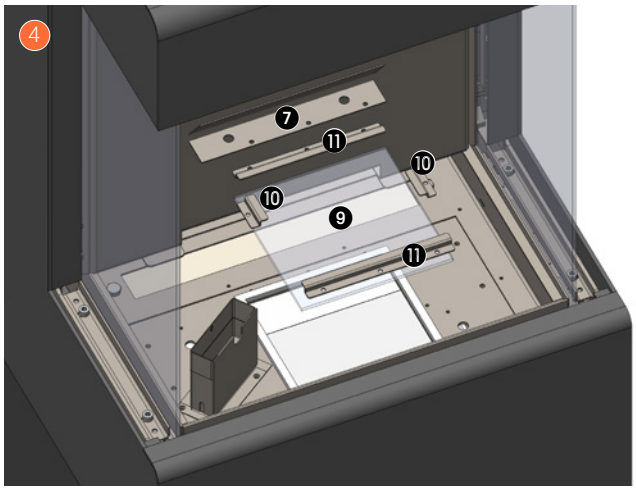

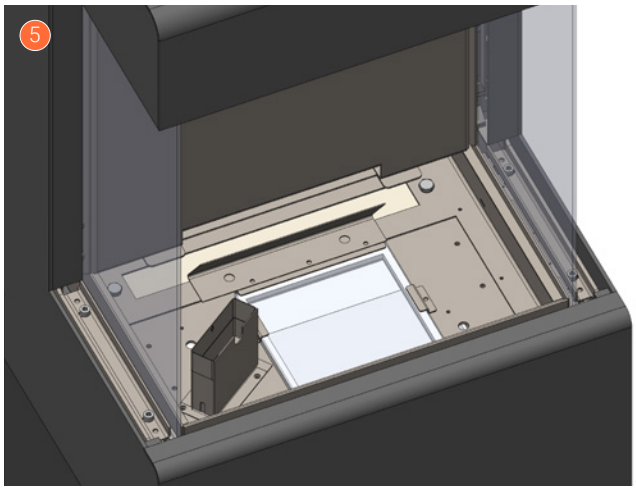

11.3 Fitting the LED unit

The LED unit can be mounted from the rear or from the inside. If the rear of the appliance is easily accessible, mounting from the rear is easiest.

Rear mounting

- Remove the rear wall.
- Place the LED unit on the mounting plate 6 ❶ and fasten the LED unit with two screws ❷.
- Connect the cable to the receiver 7.
- Connect the mains adapter to the receiver 8 and the 230 VAC wall socket.
- Check whether the LED module is working correctly, see the appliance operating instructions.

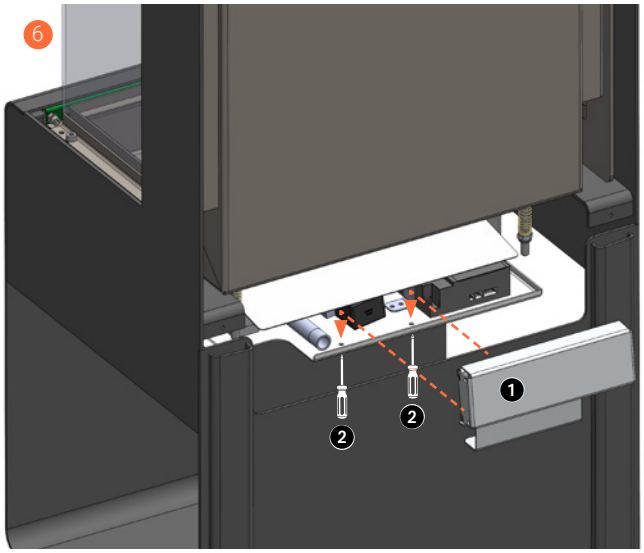

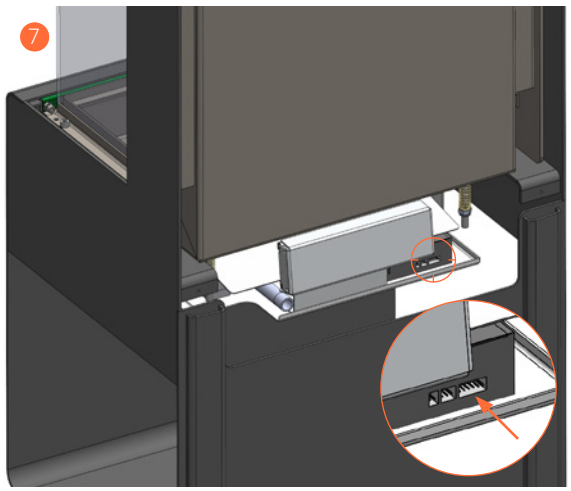

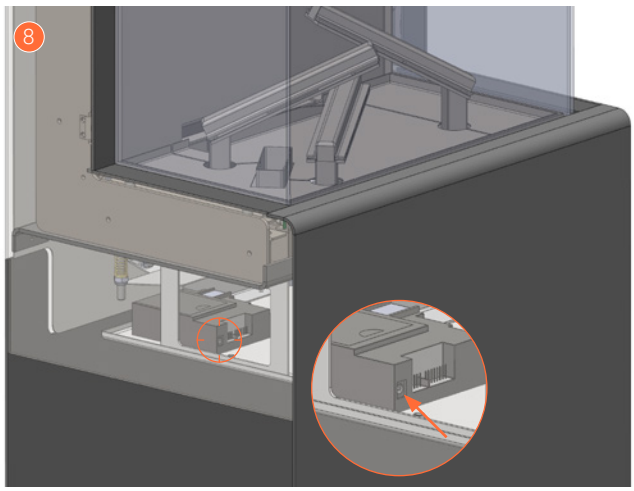

Installation from the inside

- Remove locking screw 9 1 on the left under the mounting plate.
- Lift the mounting plate on the right over the locking pin 2.
- The mounting plate 3 now drops down.
- Place the LED module 10 4 on the mounting plate using the screws supplied.
- Connect the cable to the receiver 11 6.
- Connect the mains adapter to the receiver 10 5 and the 230 VAC wall socket.
- Check whether the LED module is working correctly, see the appliance operating instructions.
- Refit the mounting plate, first hook on the right side, then fit the locking screw on the left side.

NOTE

The cable of the LED module must not touch or cross the ignition cable.

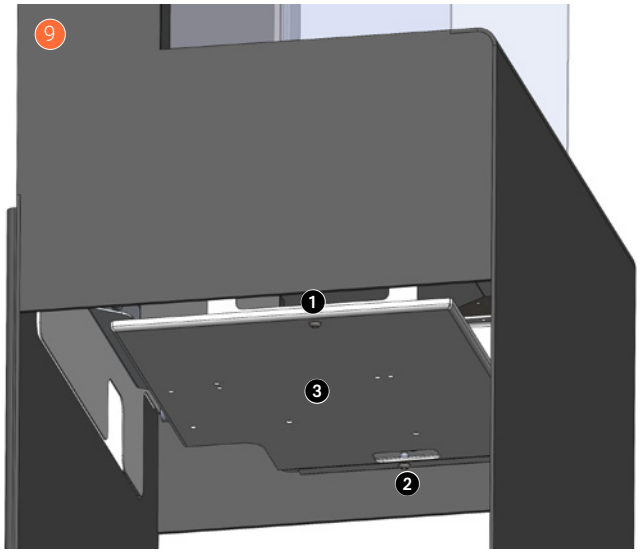

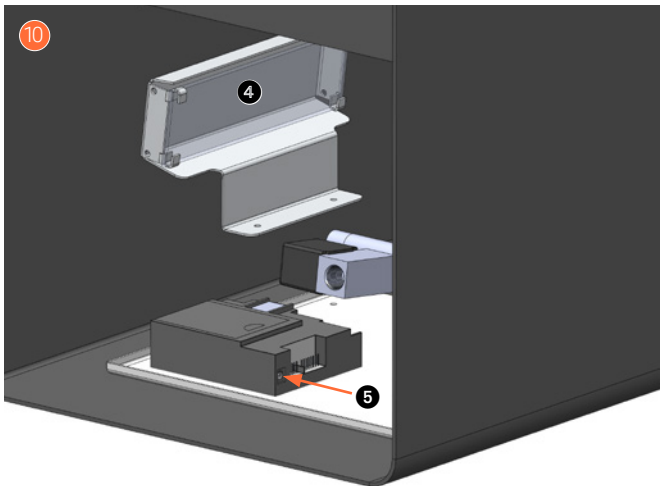

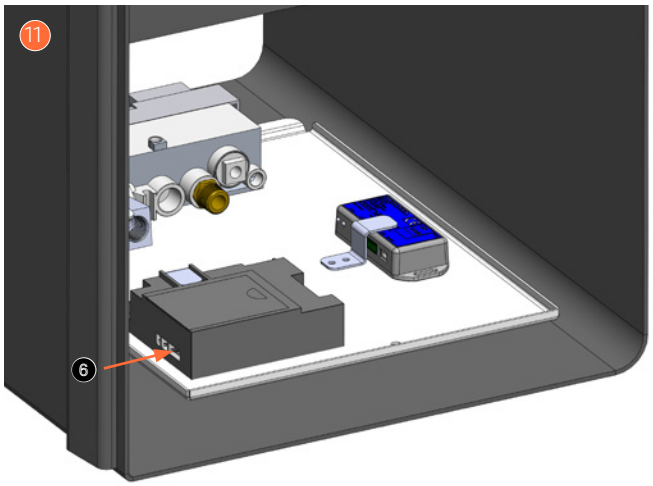

12 QUICK REFERENCE GUIDE FOR FAULTSSEARCH FOR ENCLOSED APPLIANCES USING MAXITROL GV60 GASCONTROL

Function	Possible cause	Solution
1. Acoustic signals	1 long beep → reset switch OFF (**0**)	Set switch to (**I**)
	1 long beep → connections not complete	Check connections in thermocouple circuit
	1 long beep → 8-core cable defective	Check connections in connector/replace 8-core cable
	1 long beep → micro switch defective	Replace gas valve
	1 long beep → Sync not OK	Carry out new sync procedure for remote control/receiver
	3 short beeps → mains adapter	Replace batteries or 6-VDC adapter
2. No reaction remote control/receiver	Power supply problem	Check batteries/6-VDC adapter
	No sync remote/receiver	Carry out sync procedure
	Distance between remote control/receiver	Change position of receiver
	Defective receiver	Replace receiver
	Faulty remote control	Replace remote control
3. No pilot flame gas	Maxitrol GV60 DC magnet appliance does not open (no clicking noise from gas valve)	• Check wiring and breaker on thermocouple circuit • Check/replace 8-core cable between remote control and gas valve • 1 x sparks and stop: check ground cable under torx gas valve • Replace receiver • Replace gas valve
4. Poor/no spark	Spark cable loose	Check spark cable connections
	Short circuit between cable and metal	Check whether cable is free of metal parts
	Poor spark candle	Check spark candle for fractures, replace if necessary
	Distance of sparkling candle to pilot flame head	Check distance is approximately 4mm
5. Pilot light difficult to ignite	Gas supply pressure too high, nervous flame	Adjust gas supply pressure or adjust the pilot flame pressure using the gas valve
	Gas supply pressure too low, short flame	Adjust gas supply pressure, check gas pipes, or adjust pilot flame pressure using the gas valve
	Air in (pilot flame) pipe, flame on/off	Blow pipes through, make air-free
	Injector blocked	Clean or replace pilot flame injector
	Blocked/curved pilot flame pipe	Check and clean pipe
	Pilot light head damaged	Check and replace pilot flame
6. Pilot light goes out after ignition	Small pilot flame, no flame on thermocouple tip	Check gas supply pressure, possibly too low
		Check pilot flame injector and gas pipe
	Nervous pilot flame flame, no flame on thermocouple tip	Check gas supply pressure, too high, adjust
		Adjust pilot flame pressure on gas valve
		Air in pipes, vent
	Lazy pilot flame, no flame on thermocouple tip	Check premix opening on pilot flame, must be open
	Poor connections in thermocouple circuit	Check cables/breaker in thermocouple circuit
		Check thermocouple connections in gas valve, do not over-tighten.
		Measure thermocouple circuit voltage 4.5mV minimum
	Bad thermocouple	Check open circuit voltage of thermocouple (18-30mV), replace if necessary
	Poor DC magnet appliance in Maxitrol GV60	Replace gas valve

Function	Possible cause	Solution
7. Pilot light goes out when the appliance is closed	False air along pilot flame holder/gasket	Check pilot flame holder and gasket for leaks
	False air hatches	Check pressure hatches/gasket is completely closed
	Main flame causes pilot flame to go out	Check restrictor/baffle in accordance with regulations
8. Pilot light/main flame off	Gas pre-pressure has dropped	Check correct dimensions of gas pipe or blockage, correct
	Main burner ignition, 3 beeps, low mains adapter voltage	Check batteries or 6-VDC adapter
	Too much/little transport in appliance/outlet	Check restrictor/baffle situation in accordance with instructions.
	Concentric outlet pathway incorrect	Check outlet pathway in accordance with instructions
	Recirculation, façade/roof mouth position incorrect	Check outlet in accordance with instructions
	Recirculation in closed outlet system	Check outlet connections
9. Main burner does not start up	Gas control valve knob to MAN	Check gas control valve knob to ON
10. Delayed ignition of main burner	Pilot light burner blocked	Check logs, pebbles, etc. are in the right position. pilot flame should be free of obstructions.
	Small/lazy pilot flame	Check and correct pressure and physical state of pilot flame burner
	Close main burner flame openings	Check and clean with a vacuum cleaner or similar device.
	Logs, etc. in wrong position	Check and correct, see instructions
11. Low main flame	Gas supply pressure too low	Check gas supply pressure and corrections
	Burner pressure too low	Check burner pressure, check instructions for correct values
12. No or little difference between high/low settings for main flame	Low position setting incorrect	Check and adjust low position in accordance with instructions
13. DB burner does not work	Defective step valve	Check whether clicking sound is perceptible, press button on remote control several times, replace valve if necessary
14. Sooty flame	Insufficient transport in appliance/closed drainage system	Check restrictor/baffle, follow instructions for correct value
		Check outlet system pathway in accordance with instructions
		Check outlet in accordance with regulations/ instructions
	Excessive feed/burner pressure	Check and correct gas supply/burner pressure in accordance with instructions
	Blocked burner flame openings	Check and clean with a vacuum cleaner, for example
	Incorrect premix for main burners	Check and correct, see instructions
	Decorative logs, etc. in incorrect position	Check and correct, see instructions

Appendix 1 DIMENSIONAL DRAWINGS

Trimline Tourmaline

Measurements in mm

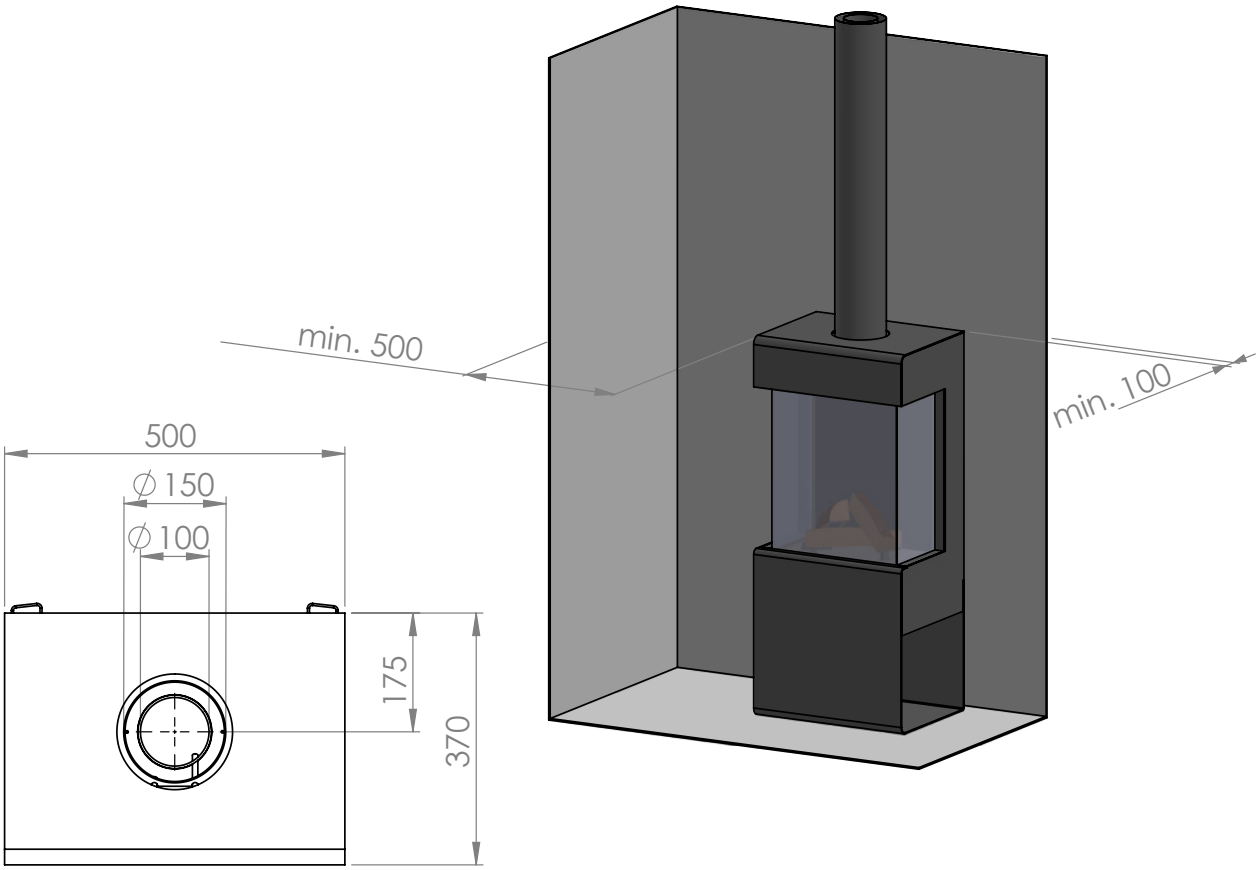

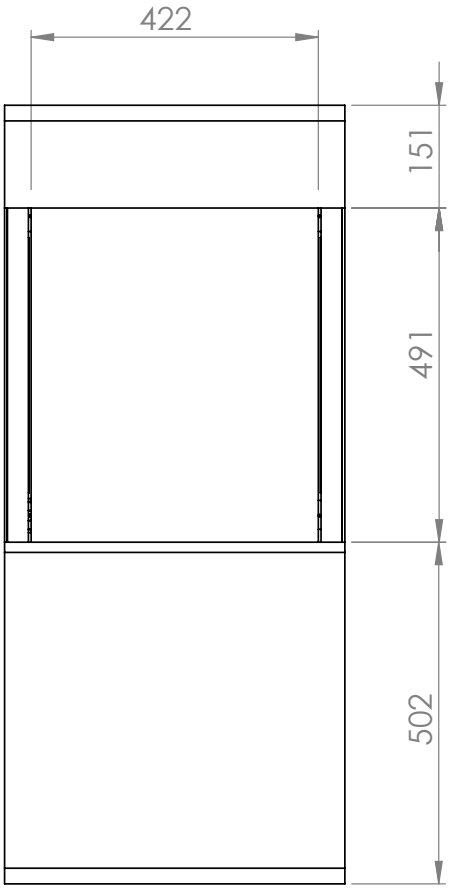

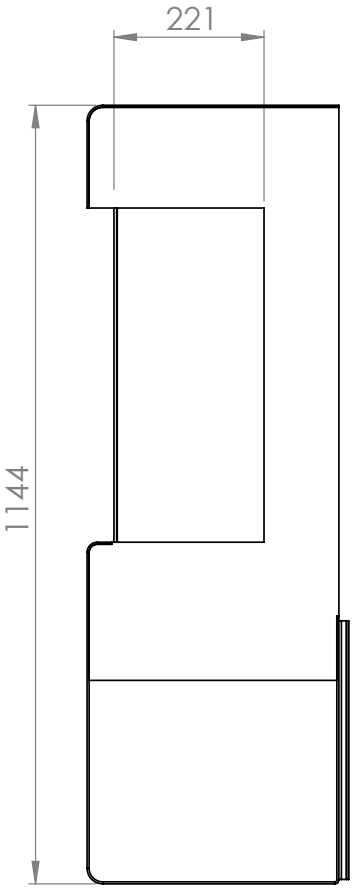

Appendix 2 CONSTRUCTION DIAGRAM DOUBLE-WALL CONCENTRIC

Material: Stainless steel AISI 316 L - Allow number 1.4404
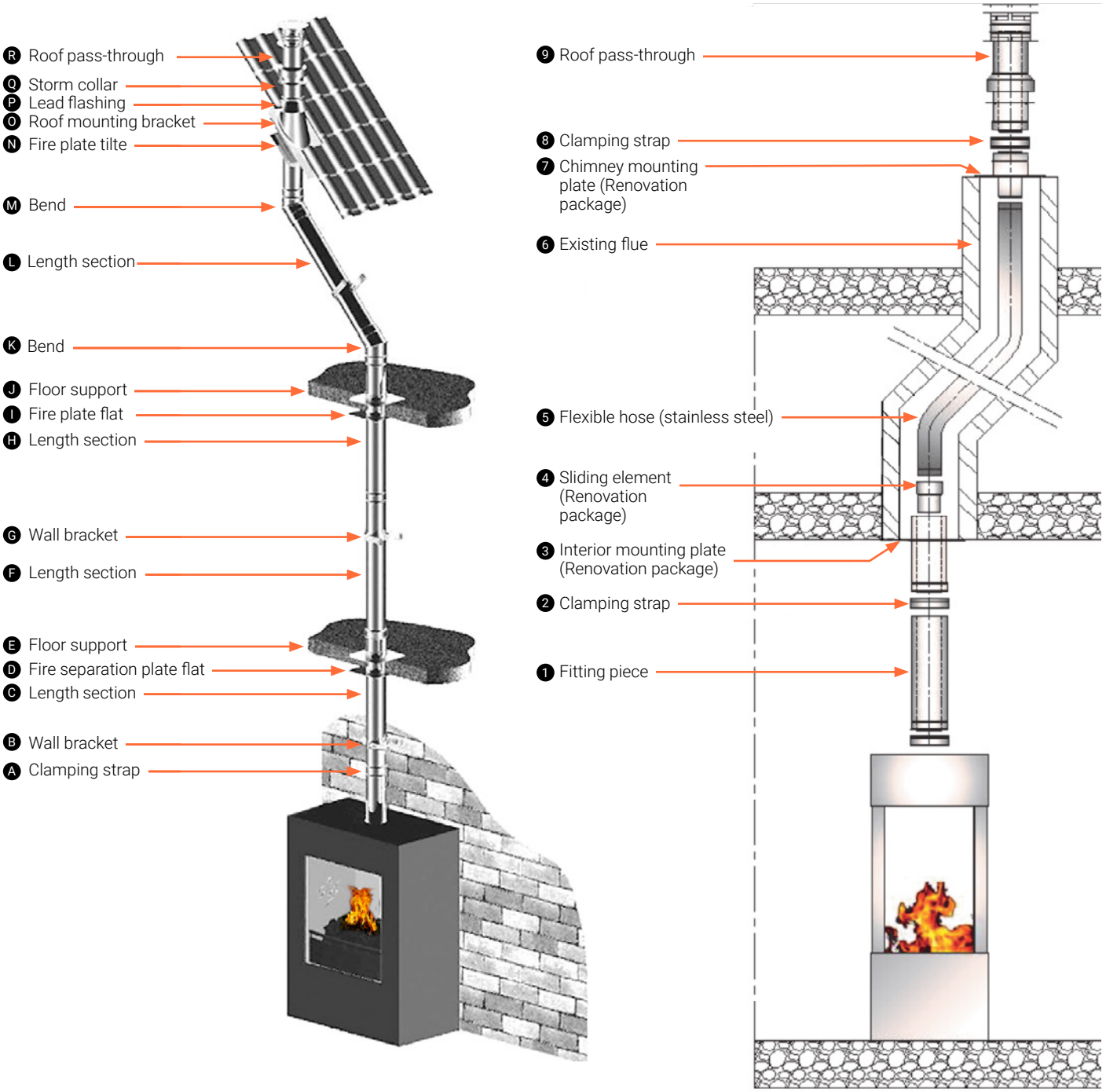
Application: for the discharge of flue gases and the supply of combustion air from gas-fired appliances or stoves with a closed combustion system